This copy may be copied for maintenance of Richter play equipment.

Instructions for wear checks of play equipment

The equipment must be checked for correct operation and safety, especially the points listed below:

Proof of maintenance

Playground.....

Date of installation .....

Checks depend on the type of equipment. Any equipment with moving parts must be checked at least twice a year, static equipment equipment at least once a year.

Intervals for maintenance work and checks generally depend on

- location
- usage
- frequency of use
- possible vandalism

For more details see also "General instructions for maintenance of playgrounds".

Small Fish
with Peepholes
Order No. 4.08503

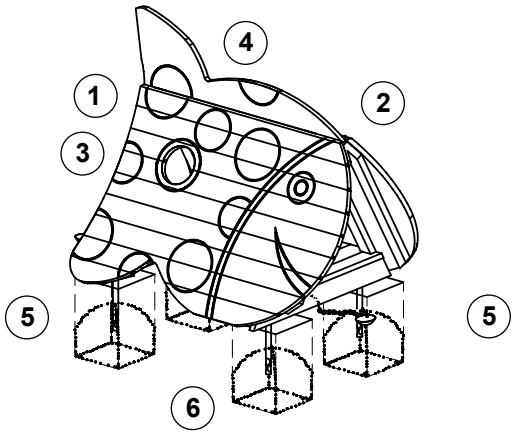

Wooden parts

1. Check for rot and, if necessary, smooth out splinters and round off sharp edges . ☐
2. Check that all bolts and screws are tight and retighten if necessary. ☐
3. If required, touch up or renew the paintwork using a solvent-free acrylic paint. ☐
4. **Recommendation**: apply paraffin wax to the upper end grain areas once a year, please refer to order No. 0.90100, 1 litre. ☐

Attached parts

5. Check that sand shovels (2) are complete and check that all elements are securely connected. ☐

Structural stability

6. In order to check for corrosion, uncover the foundation once a year. ☐

		Special notes, e.g. for repairs
Repair not carried out, it is still possible to play on equipment	☐	
Repair not carried out, equipment is taken out of action	☐	
All work carried out, everything is in order	☐	

Maintenance carried out by:

..... **Date** .....

En-EN 260.04.2019

COPYRIGHT © RICHTER SPIELGERÄTE GMBH

RICHTER SPIELGERÄTE GMBH · D-83112 FRASDORF · PHONE +49-8052/17980 · FAX 4180